Cube Series

Single Hole Lavatory Faucet
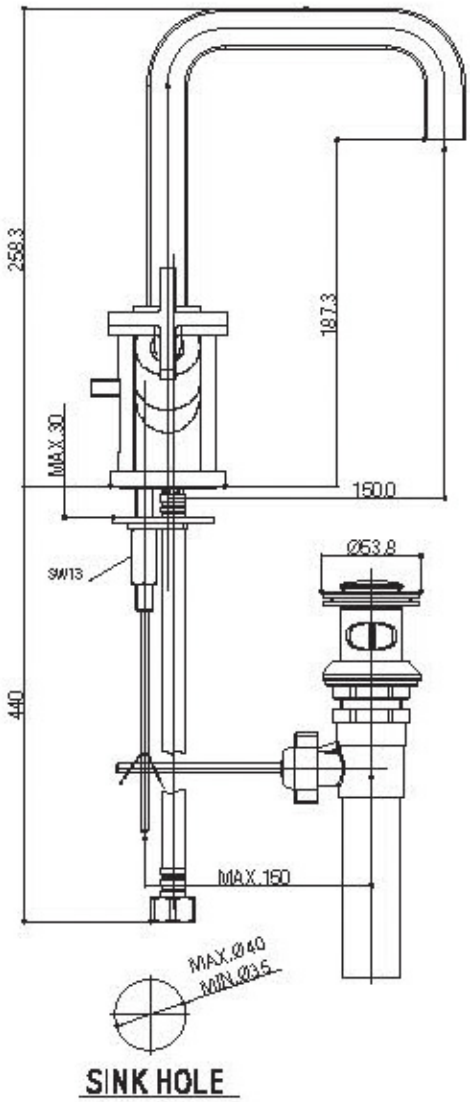
3036